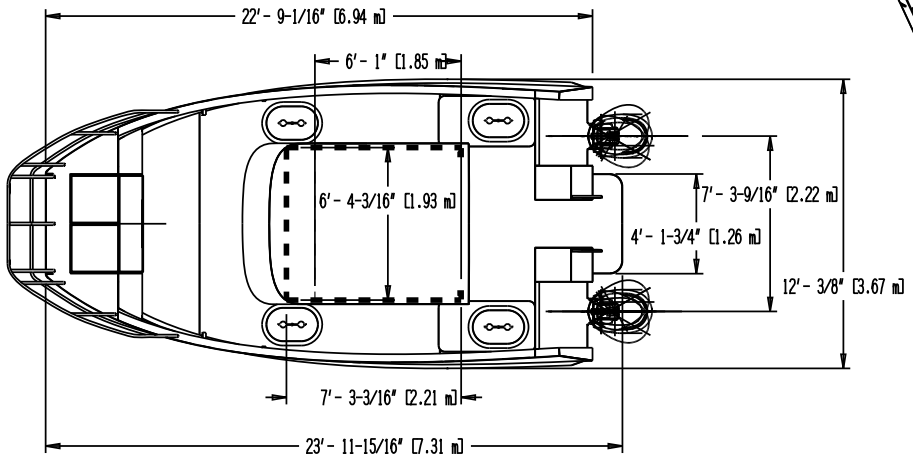

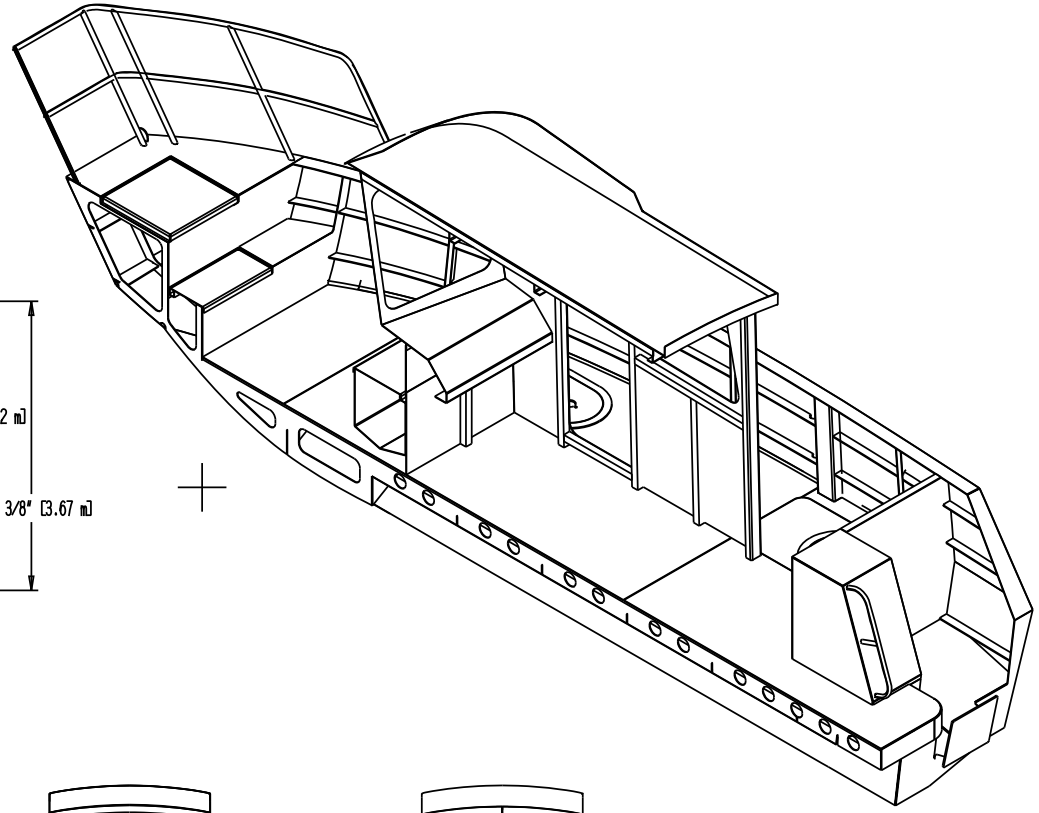

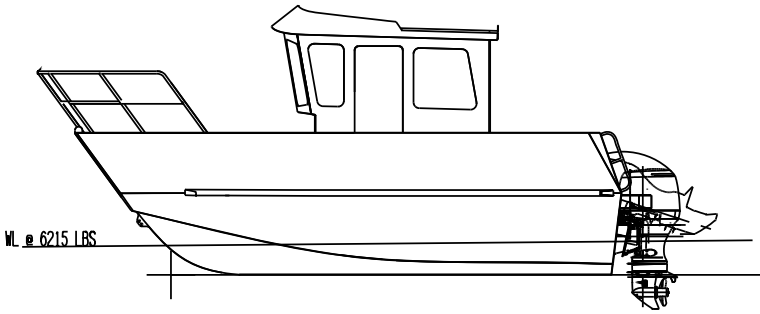

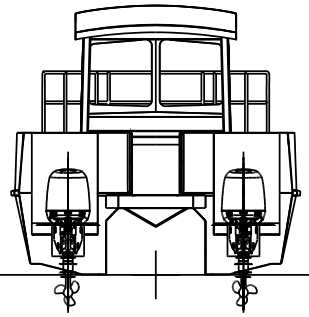

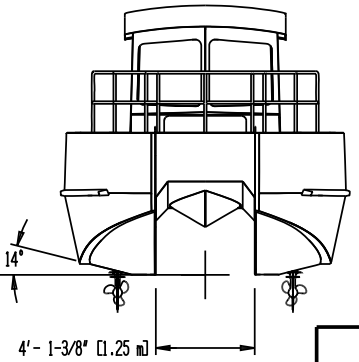

01/15/2014

COPYRIGHT

SPECIALTY MARINE
PO Box 1081, Scappoose, OR,97056

22 x 12 CAT
GENERAL ARRANGEMENT

SIZE	FSCM NO.	DWG NO.	REV
		1855 VIEWS 1	E

SCALE 3/8″=1′0″ SHEET