THESE PLANS, ACCOMPANYING INSTRUCTIONS, AND/OR SPECIFICATIONS,GRANT THE PURCHASER OR CLIENT OF RECORD RIGHTS TO BUILD ONE BOAT THEREFROM. ALL DESIGN MATERIALS REMAIN THE PROPERTY OF SPECIALTY MARINE WHETHER WORK FOR WHICH THEY ARE MADE BE CONSTRUCTED OR NOT, AND POSSESSION OF ANY OF THESE MATERIALS DOES NOT CONSTITUTE AUTHORITY FOR CONSTRUCTION. REPRODUCTION OR DUPLICATION OF ANY MATERIAL HEREIN IN ANY FORM IS A VIOLATION OF COPYRIGHT UNLESS AUTHORIZED WITH WRITTEN PERMISSION FROM SPECIALTY MARINE.

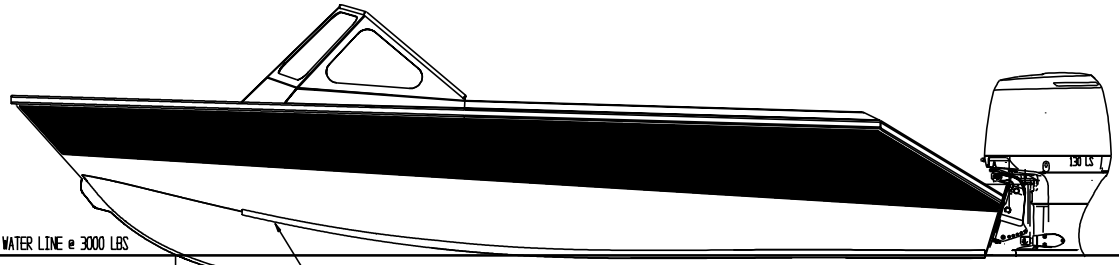

OUTBOARD PROFILE

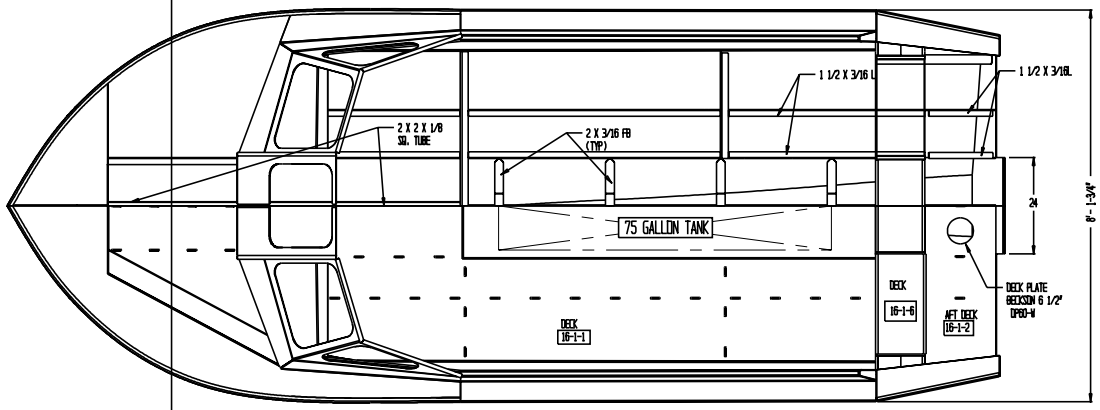

FRAMING

DECK PLAN

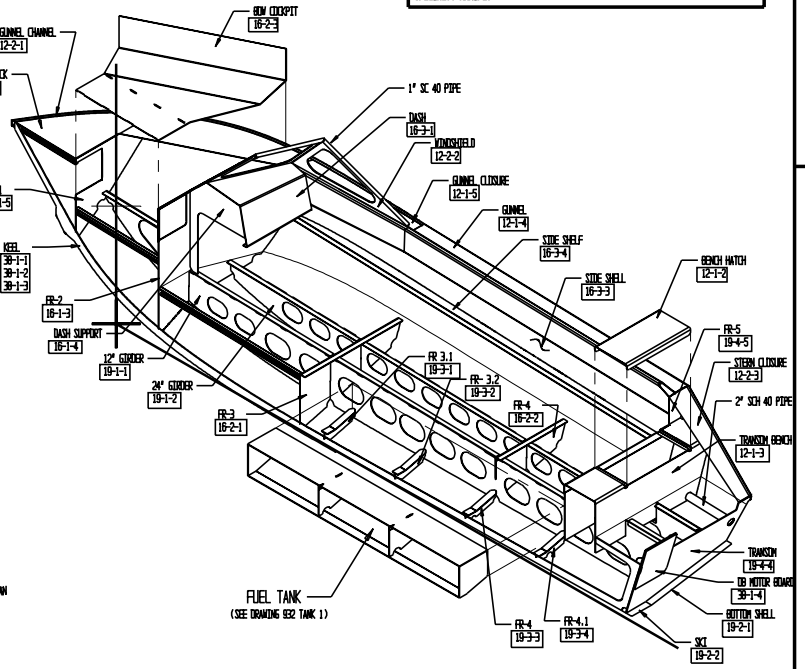

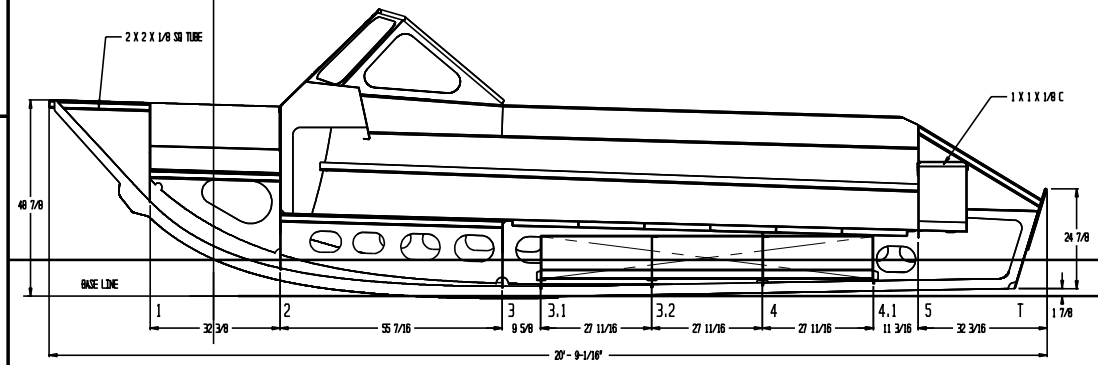

INBOARD PROFILE

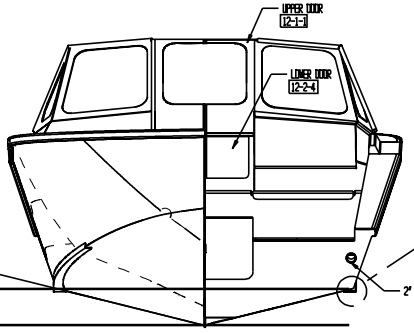

VIEW FROM FORWARD LOOKING AFT

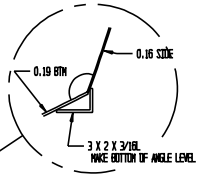

VIEW FROM AFT LOOKING FORWARD

7/22/04

SPECIALTY MARINE
PO Box 1081, Scappoose, OR.97056

GENERAL ARRANGEMENT
20 X 8 SPORTSTER © COPYRIGHT

SIZE	FSCM NO.	DWG NO.	REV
SCALE 3/4"=1'0"		932VIEWS	SHEET