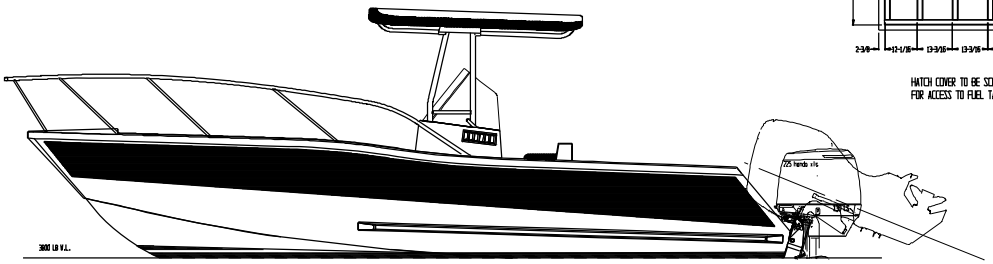

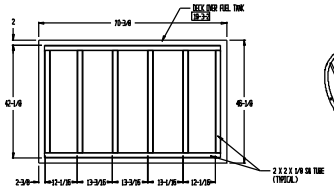

HATCH COVER TO BE SCREWED DOWN FOR ACCESS TO FUEL TANK

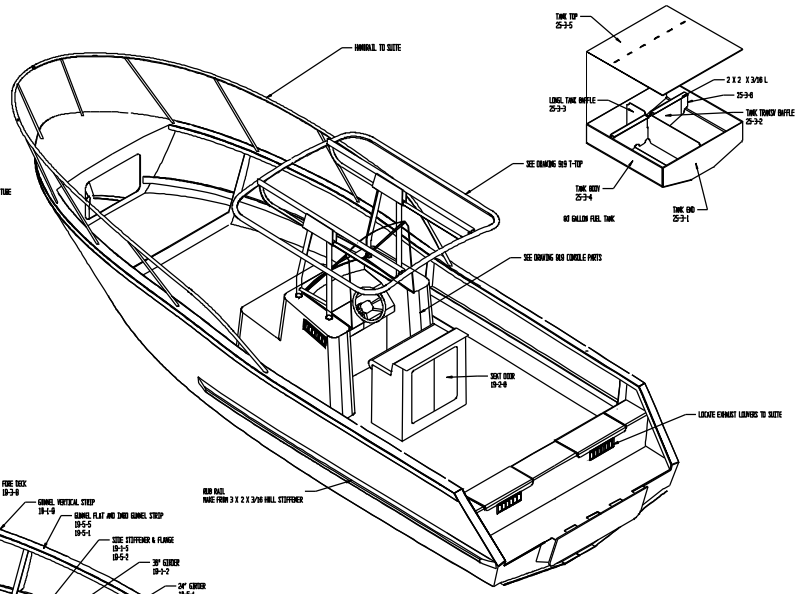

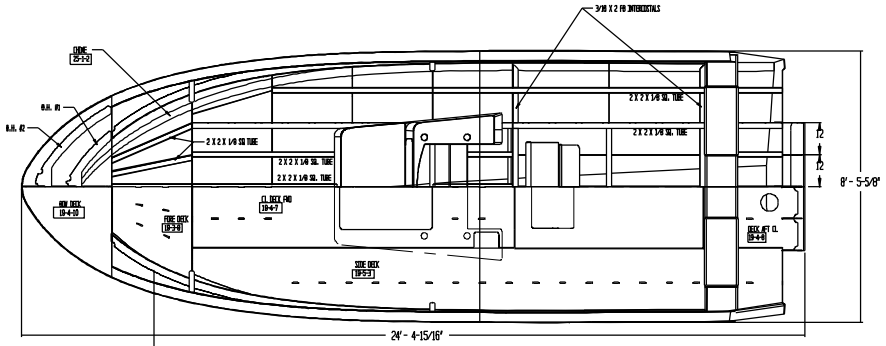

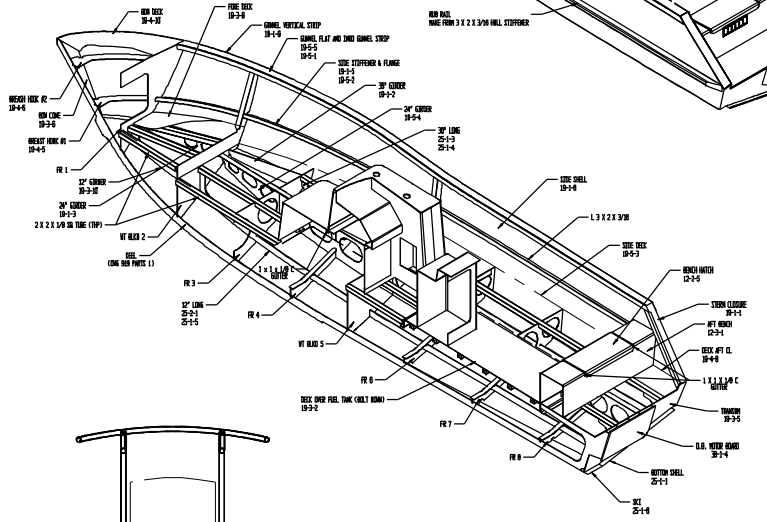

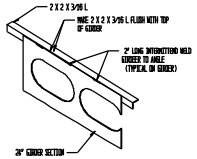

NOTES:
1. LOCATE LOCKER SEAT APPROXIMATELY AS SHOWN, BUT ADJUST FOR FORE AND AFT LENGTH TO SUITE OPERATOR COMFORT AND EGRESS TO CONSOLE.
2. LOUVERS SHOWN ARE A SUGGESTION. VENTING OF UNDER DECK AREAS IN WAY OF FUEL TANK IS FOR FUME REMOVAL, AND A 3" DIAMETER VENT IS ACCEPTABLE EACH SIDE OF CONSOLE AND FOR AFT EXHAUST VENTS.

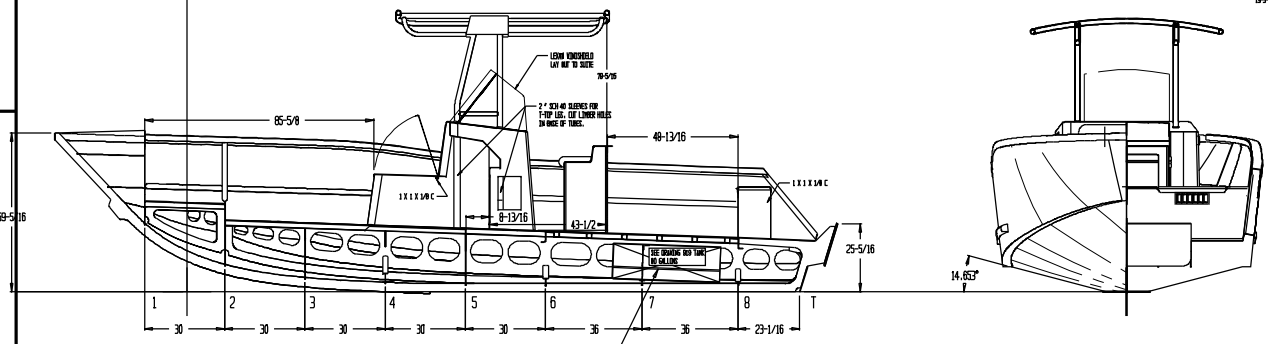

REV B 7/13/10 ADDED FUEL TANK DETAIL TO DRAWING

5/4/04

THESE PLANS, ACCOMPANYING INSTRUCTIONS, AND/OR SPECIFICATIONS, GRANT THE PURCHASER OR CLIENT OF RECORD RIGHTS TO BUILD ONE BOAT THEREFROM. ALL DESIGN MATERIALS REMAIN THE PROPERTY OF SPECIALTY MARINE WHETHER WORK FOR WHICH THEY ARE MADE BE CONSTRUCTED OR NOT, AND POSSESSION OF ANY OF THESE MATERIALS DOES NOT CONSTITUTE AUTHORITY FOR CONSTRUCTION. REPRODUCTION OR DUPLICATION OF ANY MATERIAL HEREIN IN ANY FORM IS A VIOLATION OF COPYRIGHT UNLESS AUTHORIZED WITH WRITTEN PERMISSION FROM SPECIALTY MARINE.

COPYRIGHT

SPECIALTY MARINE
PO Box 1091, Scappoose, OR,97056

24 X 8'6" SPORTFISHER

SIZE	FSCM NO.	DWG NO.	REV
		919 VIEWS	B
SCALE 1/2"=1'0"		SHEET	