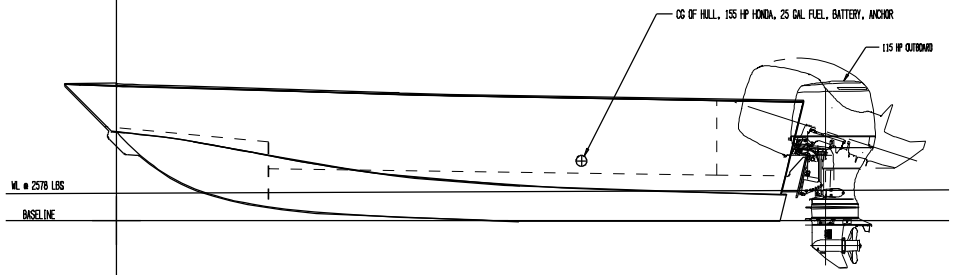

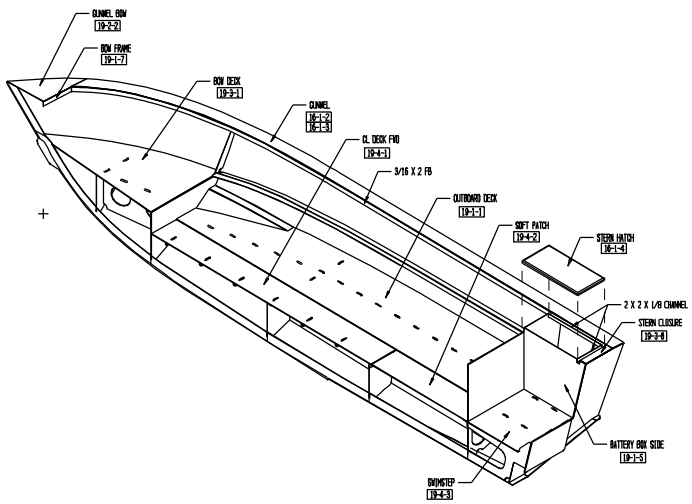

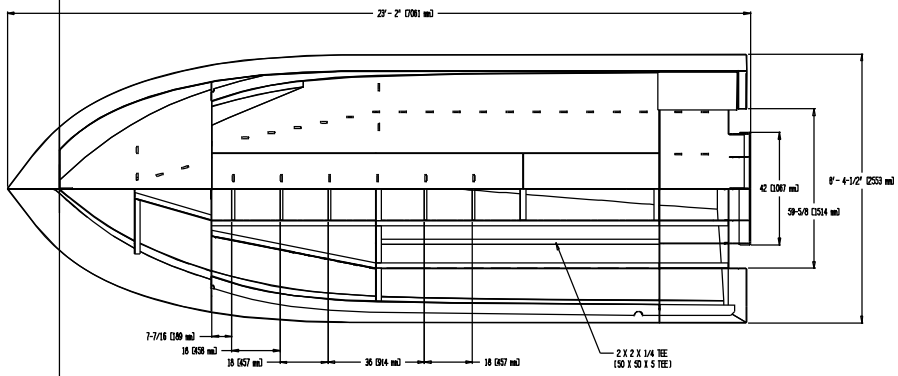

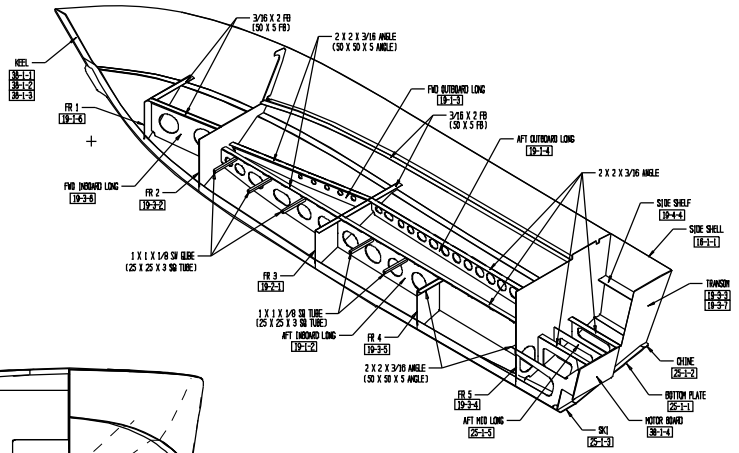

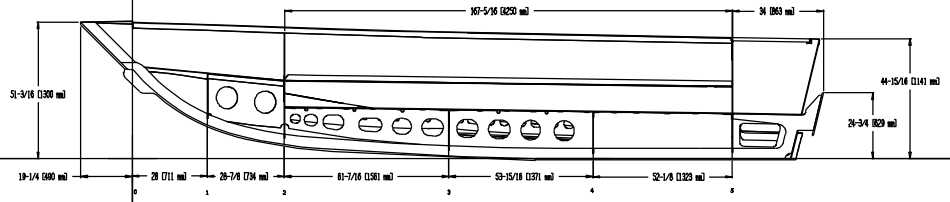

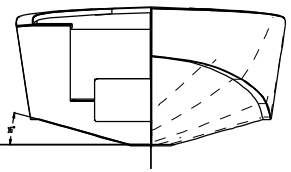

REV B 8/1/07V UPDATED 537 TO REMOVE RAISED MOTORWELL
AND RUN DECK STRAIGHT BACK TO TRANSOM, ADDED OUTBOARD MOTOR BOARD.

THESE PLANS, ACCOMPANYING INSTRUCTIONS, AND OR SPECIFICATIONS, GRANT THE PURCHASER OR CLIENT OF RECORD RIGHTS TO BUILD ONE BOAT THEREFROM. ALL DESIGN MATERIALS REMAIN THE PROPERTY OF SPECIALTY MARINE, INC WHETHER WORK FOR WHICH THEY ARE MADE BE COMMENCED OR NOT, AND POSSESSION OF ANY OF THESE MATERIALS DOES NOT CONSTITUTE AUTHORITY FOR CONSTRUCTION. REPRODUCTION OR DUPLICATION OF ANY MATERIAL HEREIN IN ANY FORM IS A VIOLATION OF COPYRIGHT UNLESS AUTHORIZED WITH WRITTEN PERMISSION FROM SPECIALTY MARINE, INC.

COPYRIGHT

SPECIALTY MARINE
PO Box 1081, Scappoose, OR 97056

23 X 8.5 ORCA VIEWS

SIZE	FSCM NO.	DWG NO.	REV
		537 VIEWS	B
SCALE 1/2"=1'0"		SHEET	