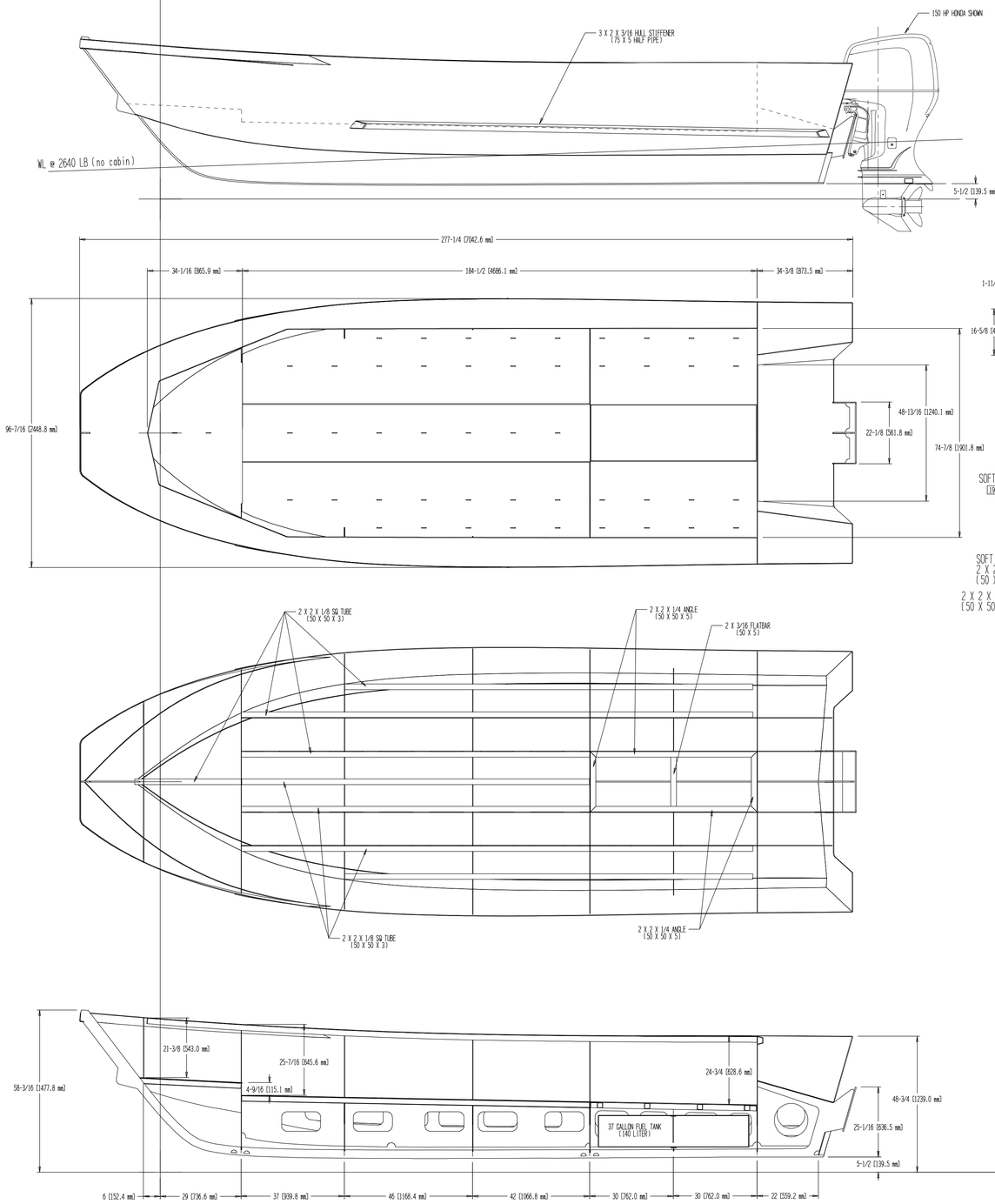

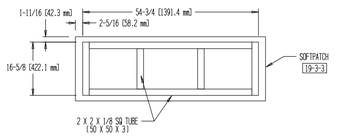

SOFTPATCH DETAIL

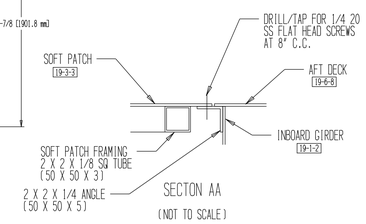

SECTON AA

(NOT TO SCALE)

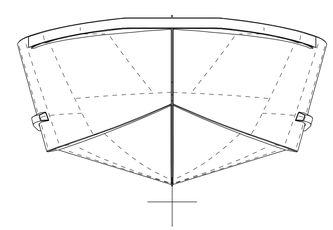

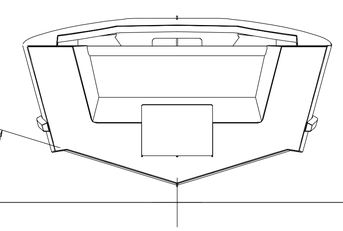

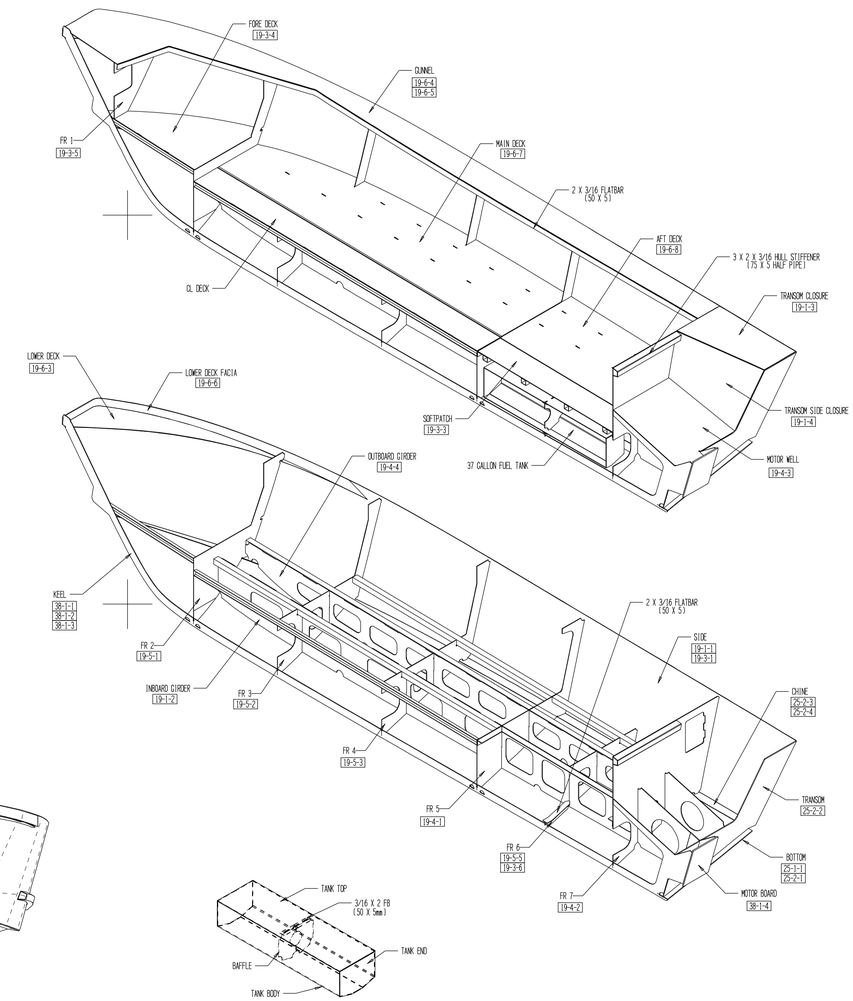

REV B 10/13/11 MODIFIED GUNNEL, INBO GIRDER, FR 3, FR 4, AND MAIN DECK. REMOVED SUMP DECK AND ADDED CL DECK

REV A, CREATE DRAWING, MODIFIED 580 TO REMOVE CABIN

XX/XX/XXXX

THESE PLANS, ACCOMPANYING INSTRUCTIONS, AND/OR SPECIFICATIONS GRANT THE PURCHASER OR CLIENT OF RECIPIO RIGHTS TO BUILD ONE BOAT THEREFROM. ALL DESIGN MATERIALS REMAIN THE PROPERTY OF SPECIALTY MARINE WHETHER WORK FOR WHICH THEY ARE MADE BE CONSTRUCTED OR NOT, AND POSSESSION OF ANY OF THESE MATERIALS DOES NOT CONSTITUTE AUTHORITY FOR CONSTRUCTION. REPRODUCTION OR DUPLICATION OF ANY MATERIAL HEREIN IN ANY FORM IS A VIOLATION OF COPYRIGHT UNLESS AUTHORIZED WITH WRITTEN PERMISSION FROM SPECIALTY MARINE.

© COPYRIGHT

SPECIALTY MARINE
PO Box 1081, Scappoose, OR,97056

23 SITKA

SIZE	FSCM NO.	DWG NO.	REV
		1659 VIEWS	B

SCALE 1/2"=1'0" SHEET