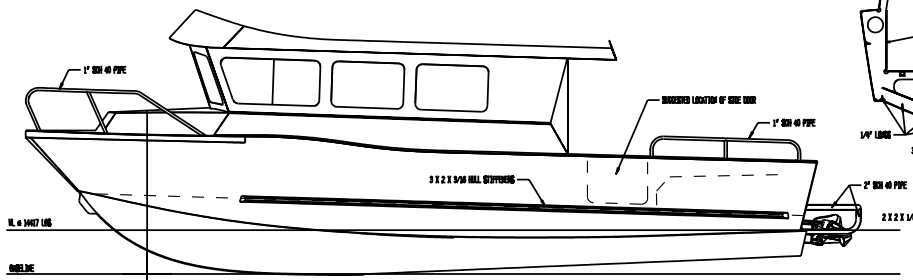

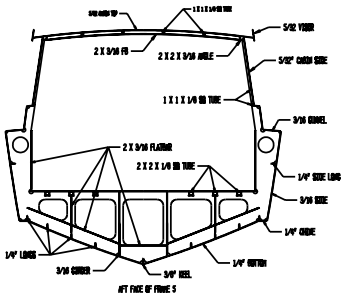

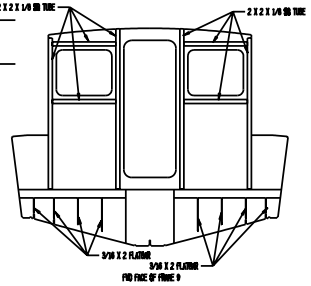

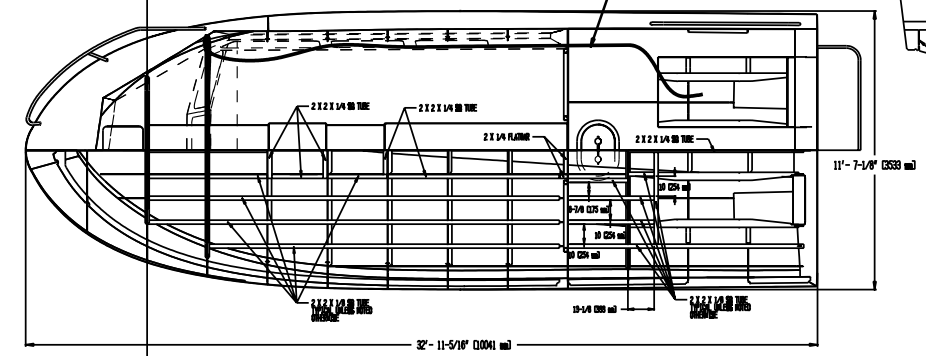

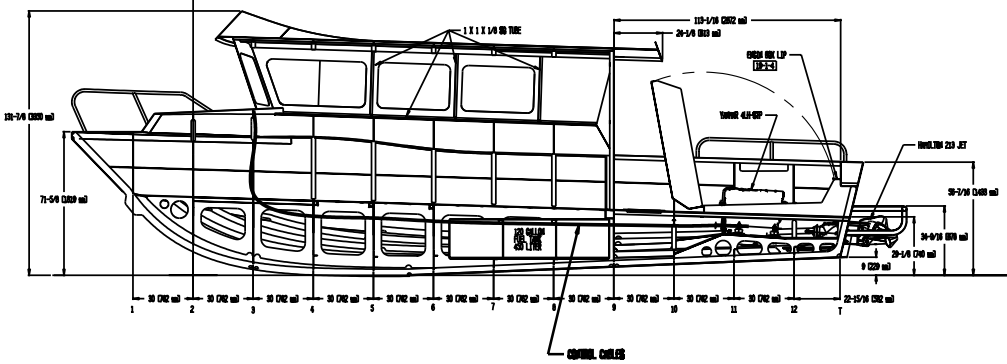

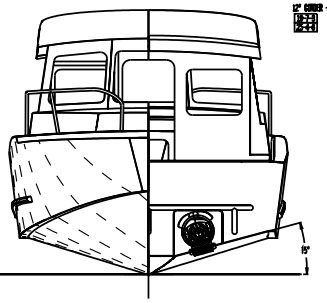

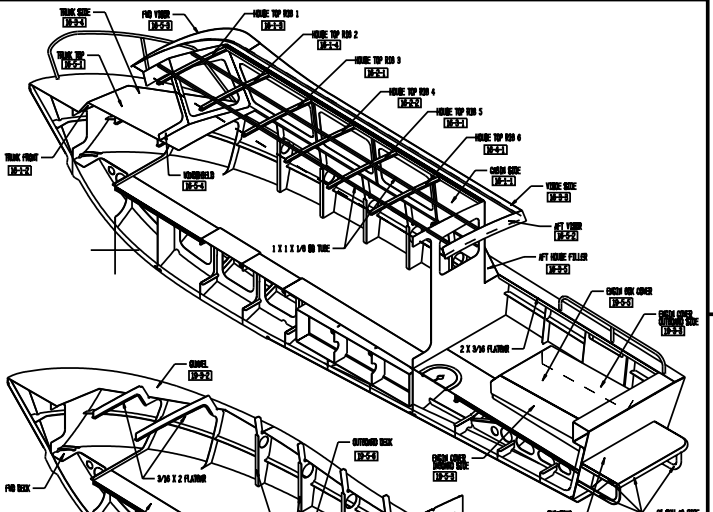

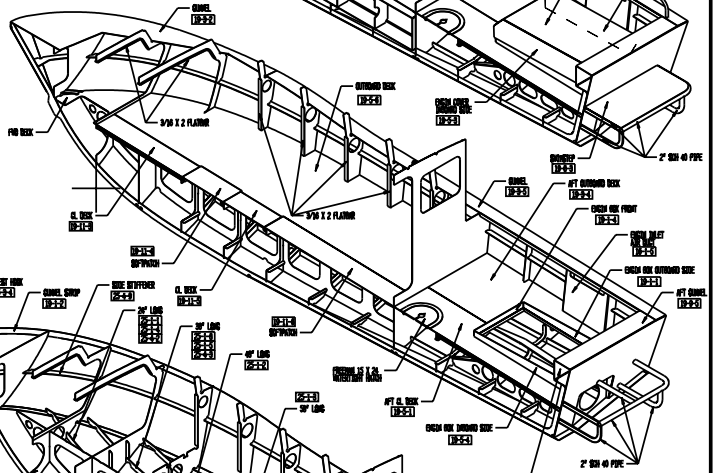

01/06/2008

THESE PLANS, ACCOMPANYING INSTRUCTIONS, AND/OR SPECIFICATIONS,SHALL BE PURCHASED BY OR LICENSE OF BUYERS WHOSE TO BUILD ONE BOAT INCLUDING. ALL DESIGN MATERIALS REMAIN THE PROPERTY OF SPECIALTY MARINE. NEITHER WORK FOR WHICH THEY ARE MADE NE CONSTRUCTED OR NOT, NOR POSSESSION OF ONE OF THESE MATERIALS DOES NOT CONSTITUTE AUTHORITY FOR CONSTRUCTION. REPRODUCTION OR EXPLOITATION OF ANY MATERIAL WHOLE OR IN ANY PART IS A VIOLATION OF COPYRIGHT UNLESS AUTHORIZED WITH WRITTEN PERMISSION FROM SPECIALTY MARINE.

COPYRIGHT

SPECIALTY MARINE
PO Box 1081, Scappoose, OR,97056

10 X 3.5 METER CREWBOAT

SIZE	PROJ NO.	DWG NO.	REV
		1367 VIEWS	A

SCALE 3/8"=1'-0" SHEET