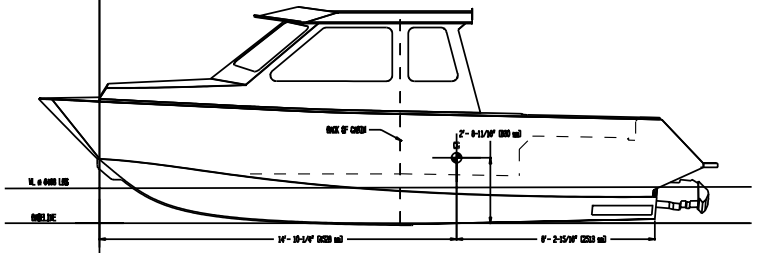


OUTBOARD PROFILE

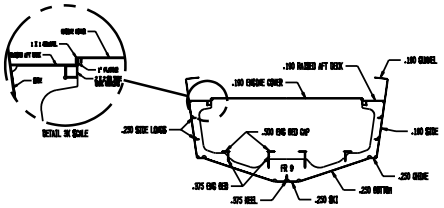


SECTION THRU FR 9
LOOKING FORWARD

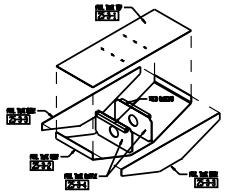

FUEL TANK ASSEMBLY

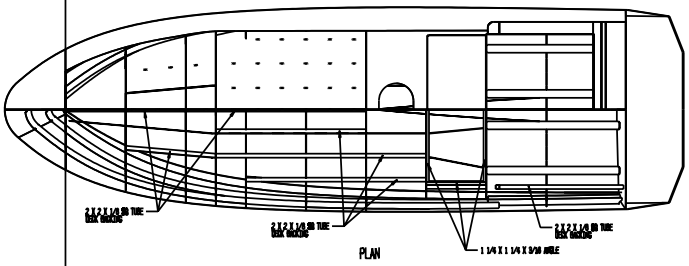


PLAN

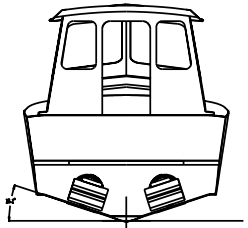

STERN VIEW

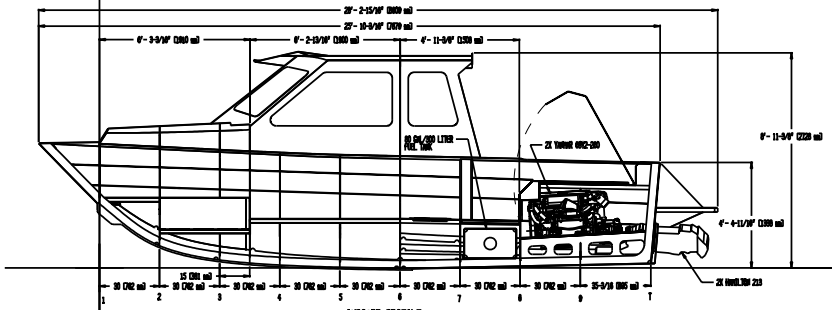


INBOARD PROFILE

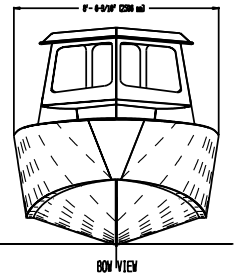


BOW VIEW

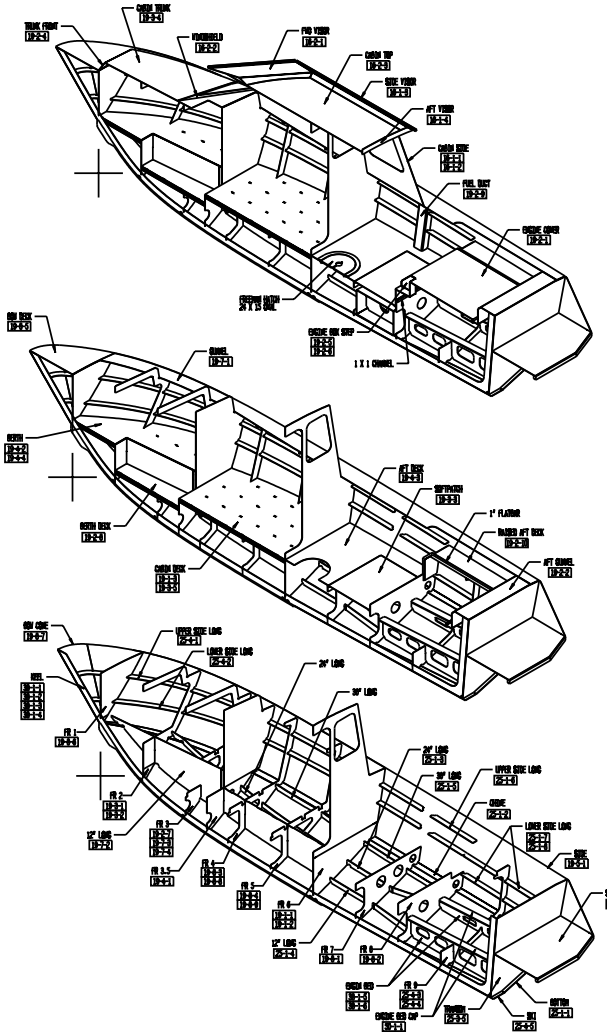


03/11/2009

COPYRIGHT

THIS A DRAWING, INCLUDING INSTRUCTIONS, AND ANY SPECIFICATIONS, MAY NOT BE PURCHASED, TRADED, OR BEGUN PROJECTS TO BUILD OR, OTHERWISE, BE MODIFIED. ALL DESIGN RIGHTS & OWNERSHIP REMAIN THE PROPERTY OF SPECIALTY MARINE. NEITHER THIS DRAWING NOR ANY PART OF IT, CONSTITUTES A SALE, OR PROVISION OF ANY OF THE MATERIALS, OR ANY PROPRIETARY INFORMATION, FOR CONSTRUCTION. REPRODUCTION IN WHOLE OR IN PART, WITHOUT WRITTEN PERMISSION OF SPECIALTY MARINE, IS STRICTLY PROHIBITED. ONLY WRITTEN PERMISSION FROM SPECIALTY MARINE, AUTHORIZED BY THE WRITTEN PERMISSION FROM SPECIALTY MARINE.

SPECIALTY MARINE
PO Box 1081, Scappoose, OR,97056

28 X 8.5 ORCA
8.6 X 2.6 METER

| SIZE | FSCM NO. | DWG NO. | REV |
|---|---|---|---|
| | | 1366 VIEWS | A |

SCALE 3/8"=1'-0" SHEET