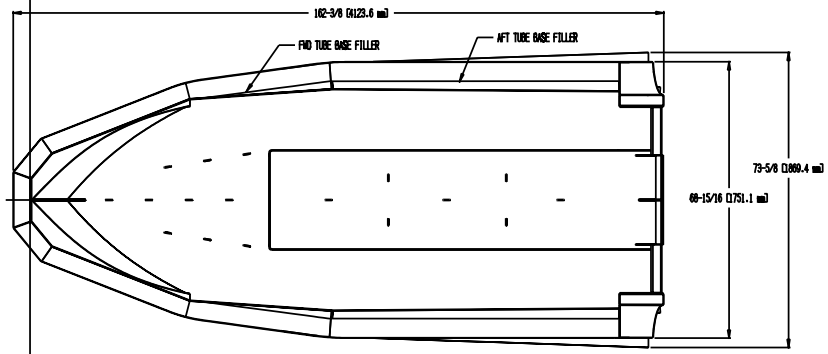

PLAN WITHOUT TUBE

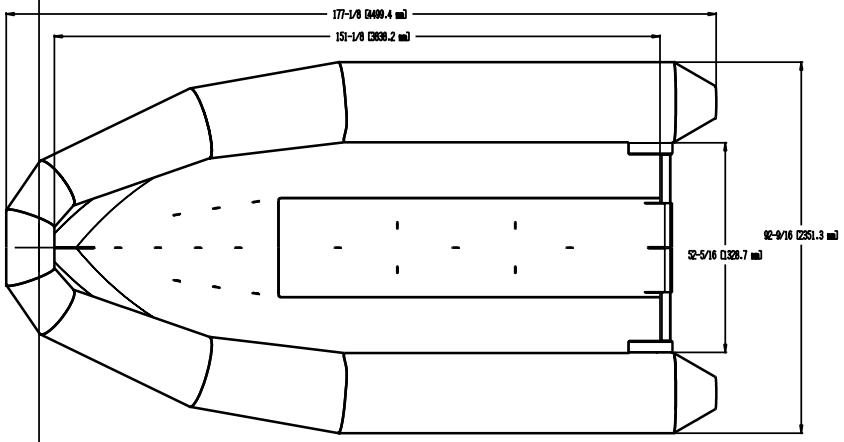

PLAN

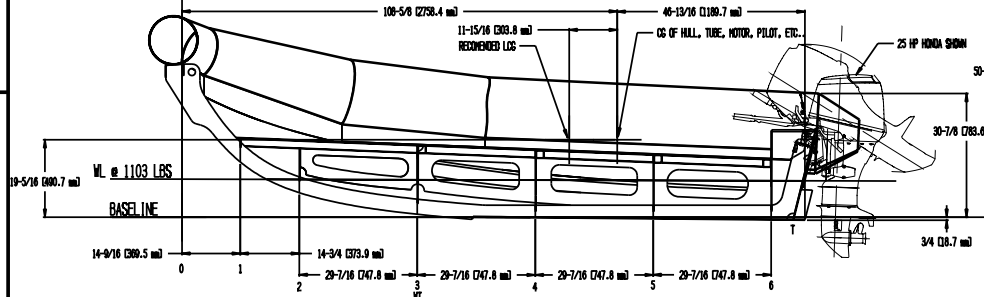

INBOARD PROFILE

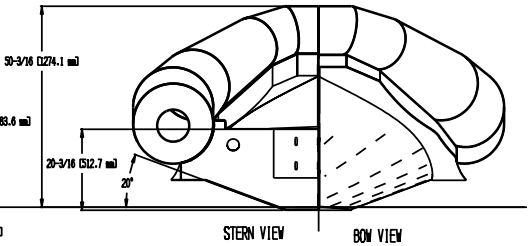

STERN VIEW BOW VIEW

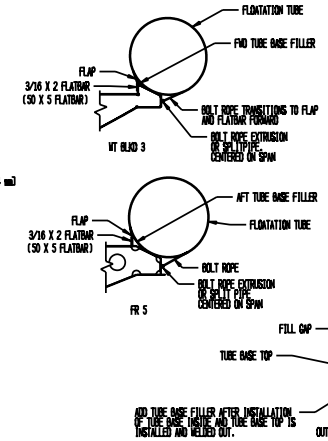

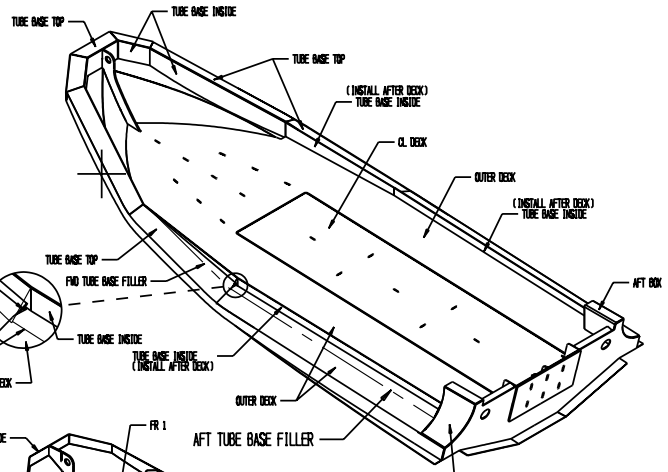

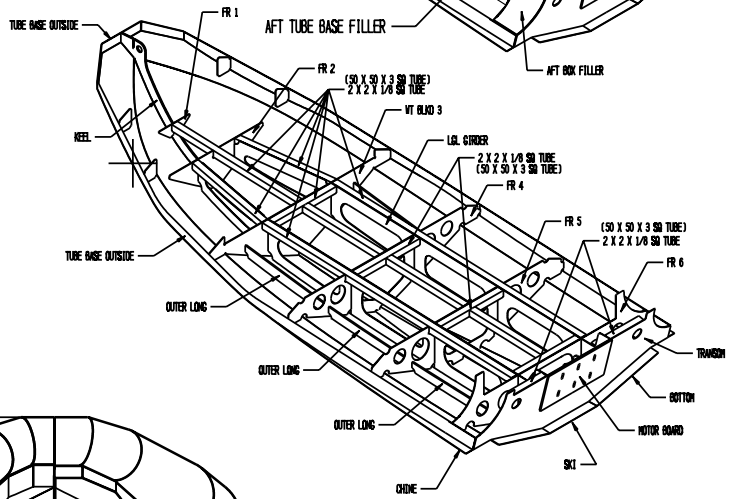

REV B 8/11/2008 ADDED TUBE BASE FILLER PLATES.

THESE PLANS, ACCOMPANYING INSTRUCTIONS, AND OR SPECIFICATIONS, GRANT THE PURCHASE OR CLIENT OF RECORD RIGHTS TO BUILD ONE BOAT THEREFROM. ALL DESIGN MATERIALS REMAIN THE PROPERTY OF SPECMAR, INC WHETHER WORK FOR WHICH THEY ARE MADE BE CONSTRUCTED OR NOT. AND POSSESSION OF ANY OF THESE MATERIALS DOES NOT CONSTITUTE AUTHORITY FOR CONSTRUCTION, REPRODUCTION OR DUPLICATION OF ANY MATERIAL HEREIN IN ANY FORM IS A VIOLATION OF COPYRIGHT UNLESS AUTHORIZED WITH WRITTEN PERMISSION FROM SPECMAR, INC.

COPYRIGHT

SPECIALTY MARINE
PO Box 1081, Ocean View, DE 19970

4.5 X 2.35 METER RIB

SIZE	FSCM NO.	DWG NO.	REV
		1334 VIEWS	B
SCALE 3/4"=1'0"		SHEET	