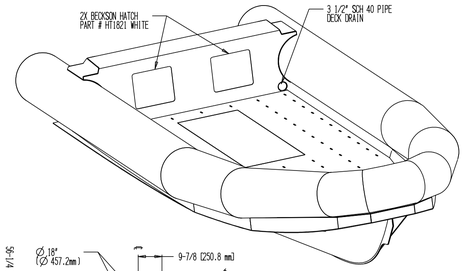

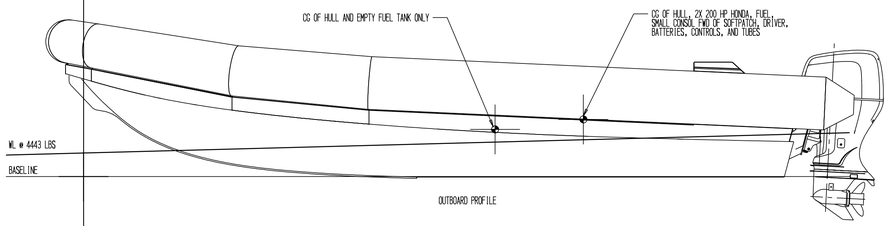

OUTBOARD PROFILE

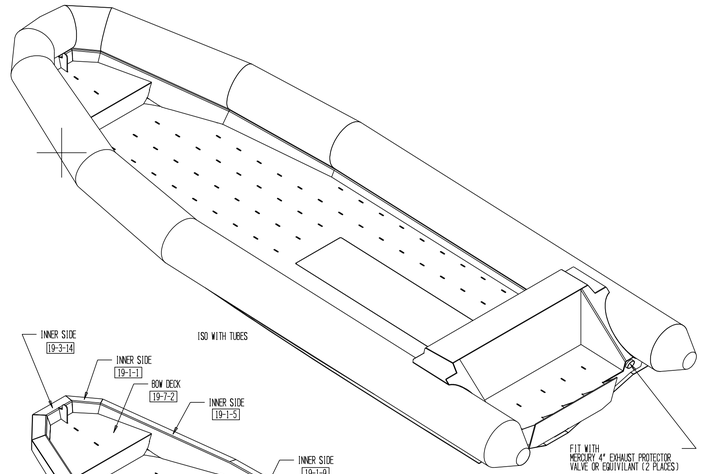

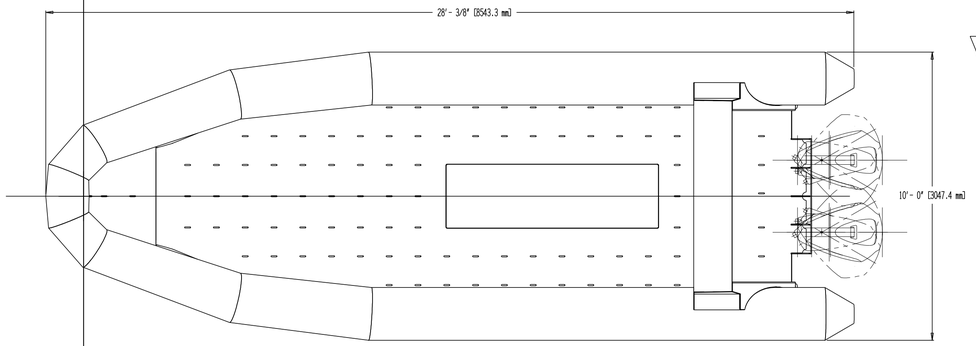

PLAN

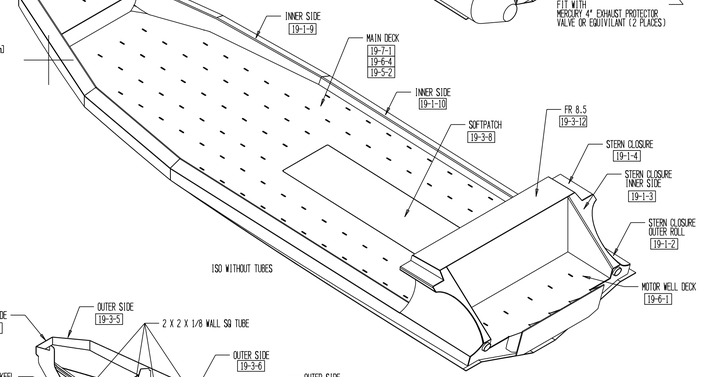

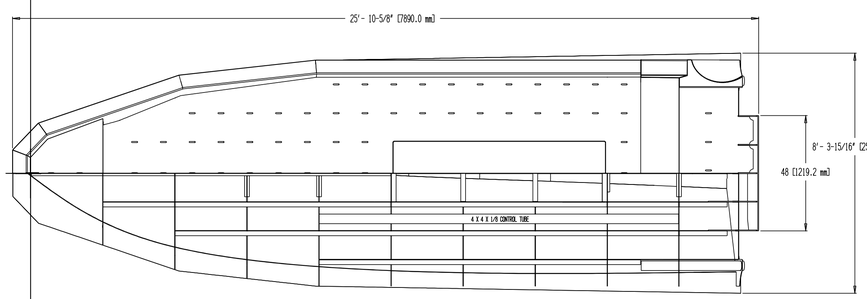

PLAN

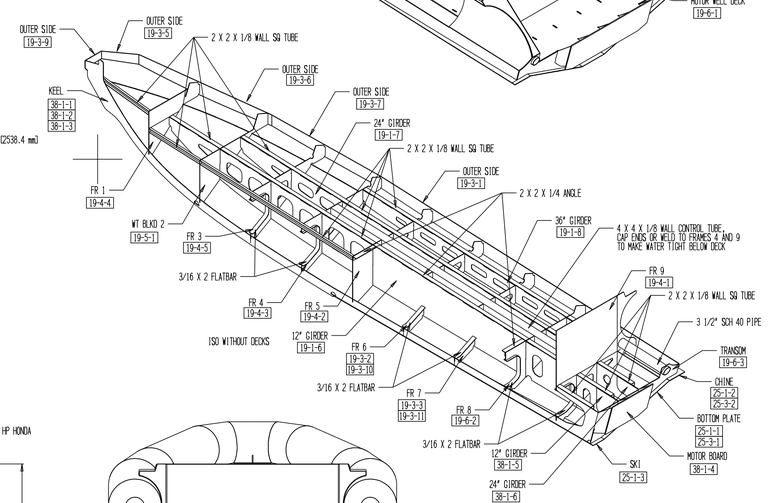

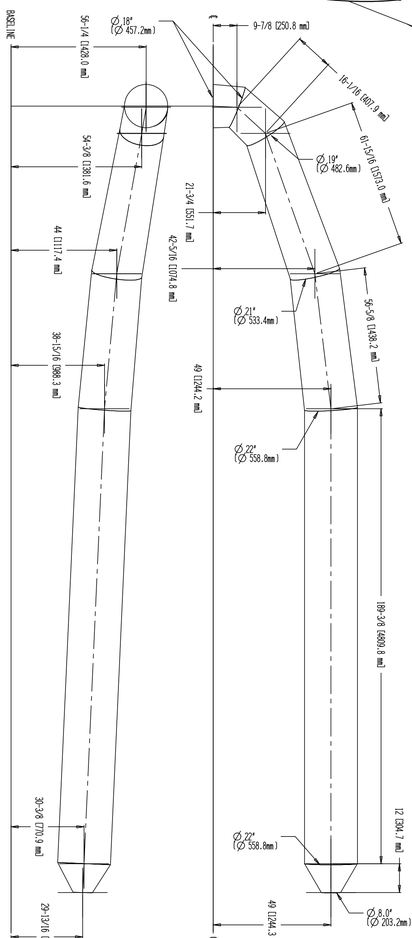

BOW VIEW

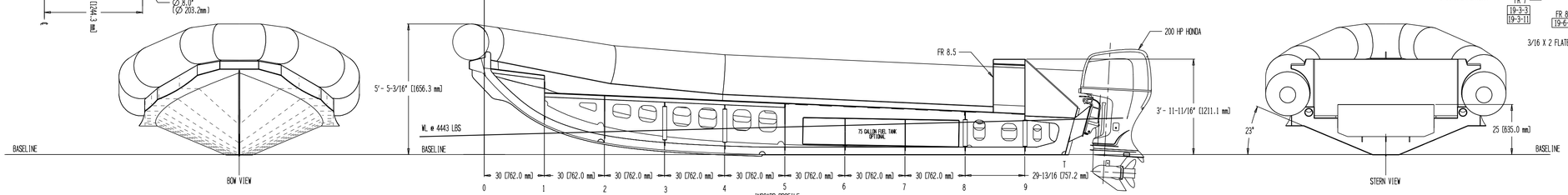

INBOARD PROFILE

STERN VIEW

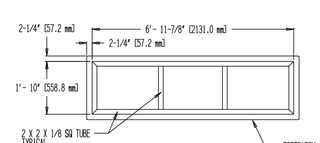

SOFTPATCH DETAIL

REV A 4/3/08 CREATE DRAWING

REV B 4/4/08 ADDED TUBE LAYOUT VIEWS

4/4/08

THESE PLANS, ACCOMPANYING INSTRUCTIONS, AND/OR SPECIFICATIONS,GRANT THE PURCHASER OR CLIENT OF RECORD RIGHTS TO BUILD ONE BOAT THEREFROM. ALL DESIGN MATERIALS REMAIN THE PROPERTY OF SPECIALTY MARINE WHETHER WORK FOR WHICH THEY ARE MADE BE CONSTRUCTED OR NOT, AND POSSESSION OF ANY OF THESE MATERIALS DOES NOT CONSTITUTE AUTHORITY FOR CONSTRUCTION. REPRODUCTION OR DUPLICATION OF ANY MATERIAL HEREIN IN ANY FORM IS A VIOLATION OF COPYRIGHT UNLESS AUTHORIZED WITH WRITTEN PERMISSION FROM SPECIALTY MARINE.

COPYRIGHT

SPECIALTY MARINE
PO Box 1081, Scappoose, OR.97056

8.5 X 3 METER RIB (28 X 10)

SIZE	FSCM NO.	DWG NO.	REV
		1314 VIEWS	B
SCALE 3/8"=1'0"		SHEET	