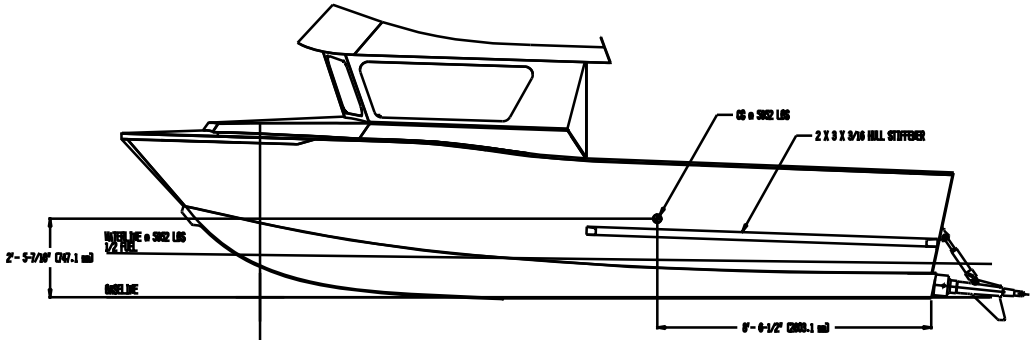

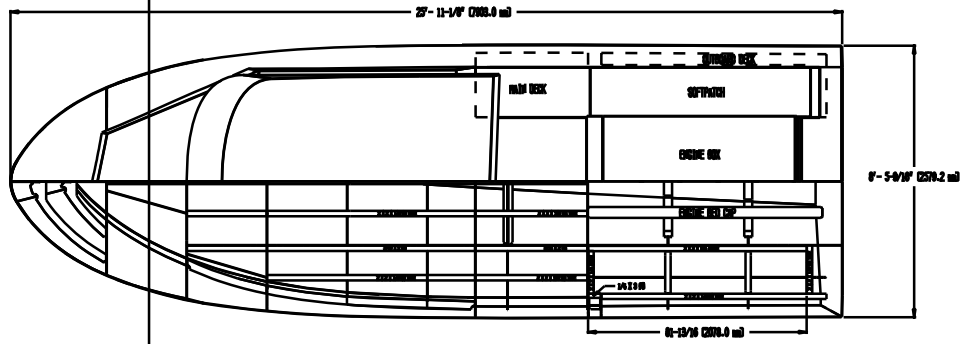

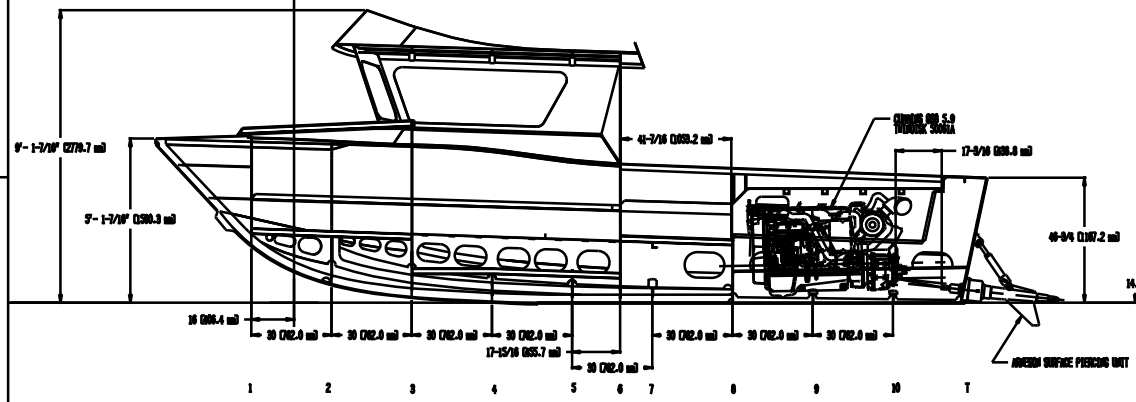

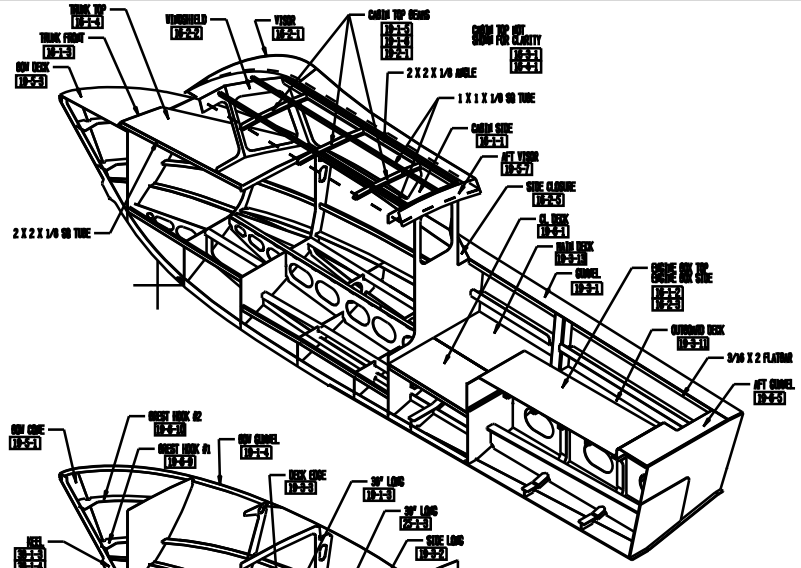

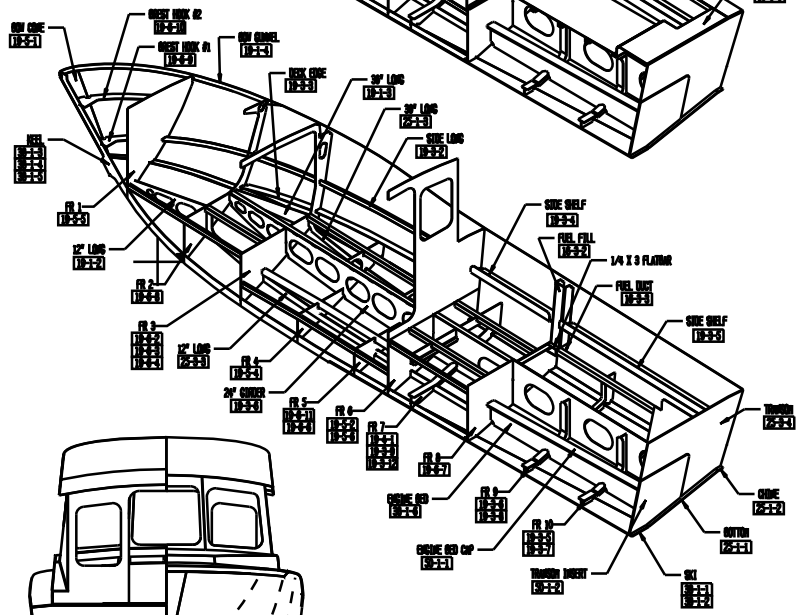

REV B 5/20/08 MODIFY TRANSOM TO ADD 1/2" SHEET

REV A 2/4/08 ENGINE UNDERS

05/20/2008

COPYRIGHT

SPECIALTY MARINE

PO Box 1001, Scappoose, OR 97056

26 X 8.5 ORCA

GENERAL ARRANGEMENT

SIZE	FSCM NO.	DWG NO.	REV
		1305 VIEWS	B
SCALE 1/2"=1'0"		SHEET	