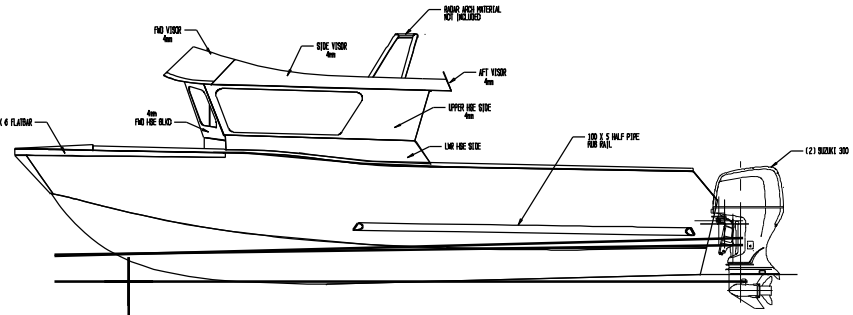

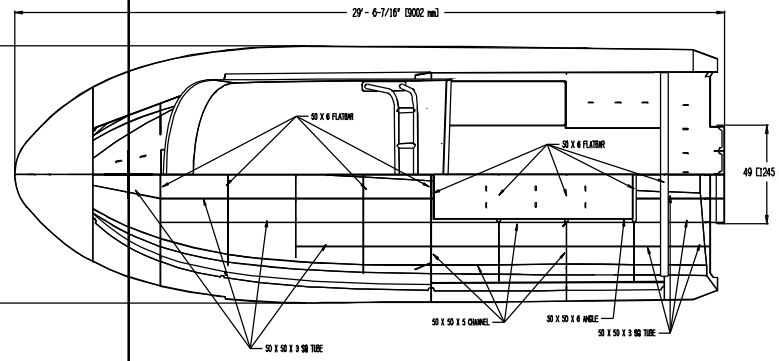

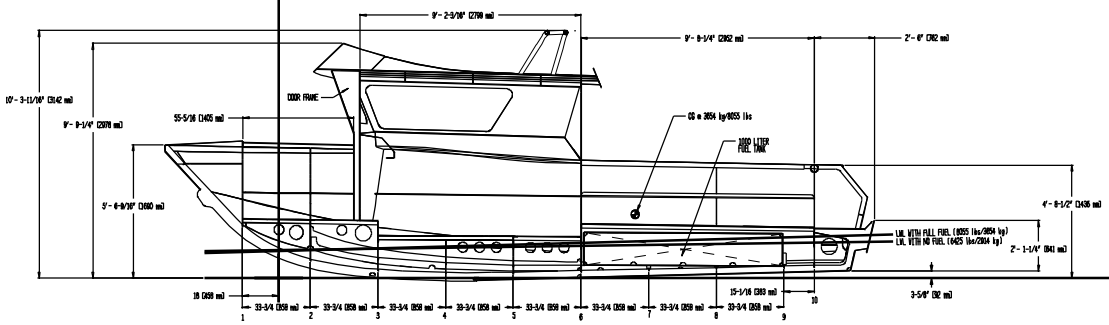

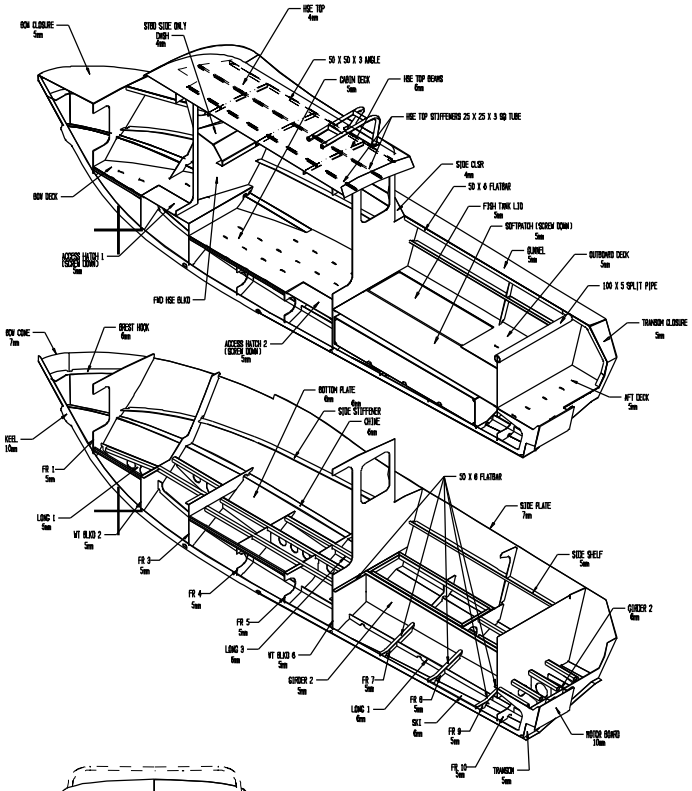

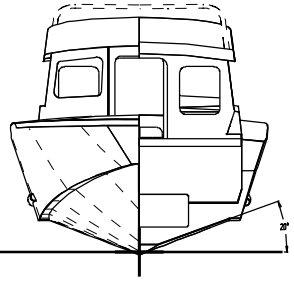

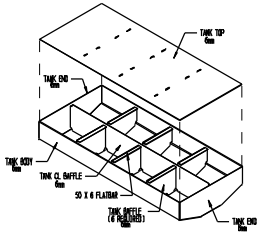

FUEL TANK DETAIL.

12/4/2007

THESE PLANS, ACCOMPANYING INSTRUCTIONS, BID-UP SPECIFICATIONS,GRANT THE PURCHASER OR CLIENT OF RECORD RIGHTS TO BUILD ONE UNIT THEREFROM. ALL OTHER RIGHTS REMAIN THE PROPERTY OF SPECIALTY MARINE. NEITHER WORK OR PROPERTY WILL BE RE CONSTRUCTED BLIND, AND DISSEMINATION OF ANY OF THESE MATERIALS MAY NOT CONSTITUTE AUTHORITY FOR CONSTRUCTION. REPRODUCTION OR DUPLICATION OF ANY MATERIAL VIOLATES THE FEDERAL COPYRIGHT LAWS. VIOLATION OF COPYRIGHT UNLESS AUTHORIZED WITH WRITTEN PERMISSION FROM SPECIALTY MARINE.

COPYRIGHT

SPECIALTY MARINE
PO Box 1081, Scappoose, OR.97056

9 X 3.3 METER ORCA GENERAL ARRANGEMENT

SIZE	FSCM NO.	DWG NO.	REV
		1256 VIEWS	A

SCALE 3/8"=1'0" SHEET