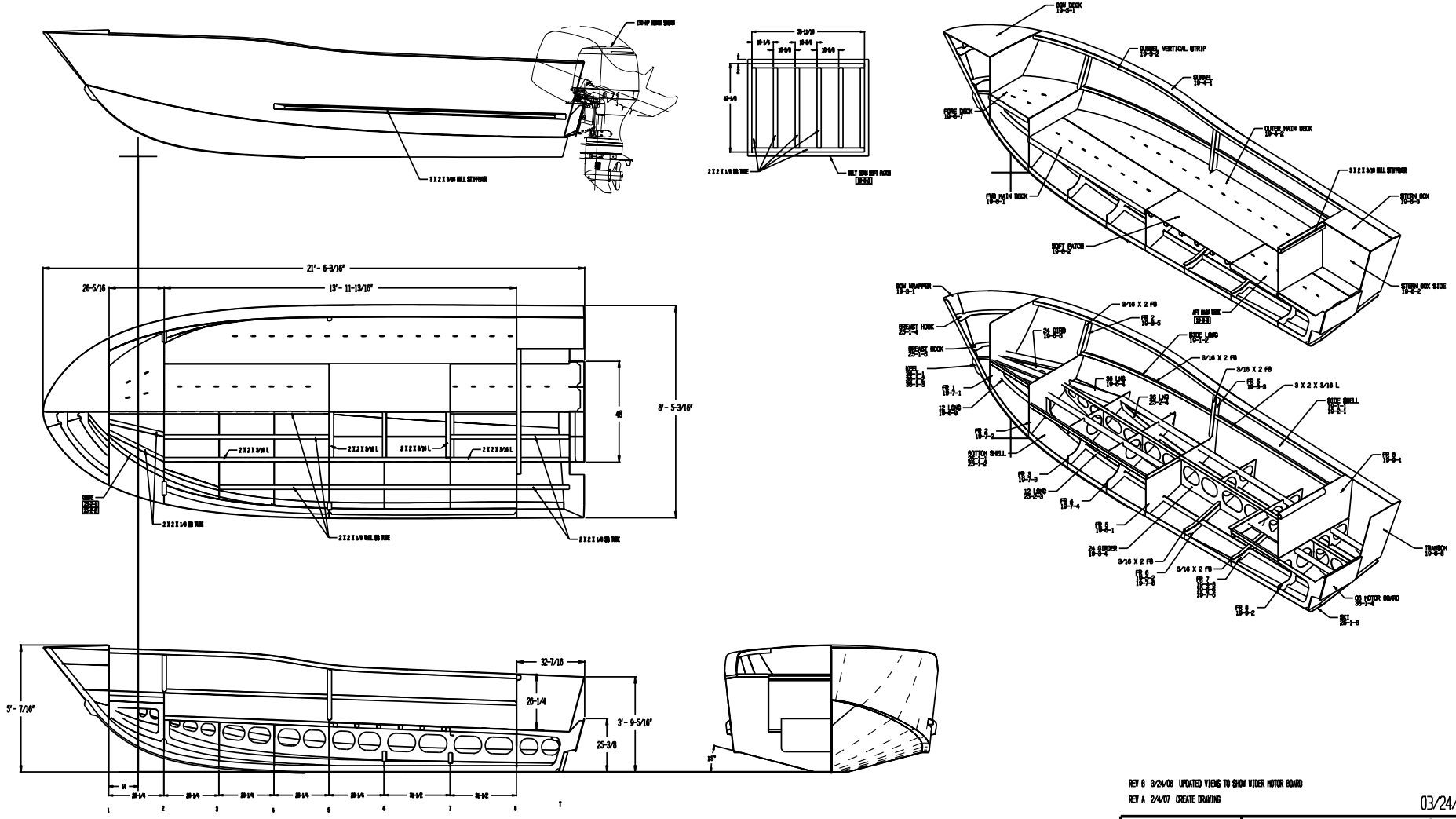

THESE PLANS, ACCOMPANYING INSTRUCTIONS, AND/OR SPECIFICATIONS, GRANT THE PURCHASER OR CLIENT OF RECORD ASSIGNED TO BUILD ONE BOAT DESCRIBED. ALL DESIGN MATERIALS REMAIN THE PROPERTY OF SPECIALTY MARINE WHETHER WORK FOR WHICH THEY ARE MADE HAS COMMENCED OR NOT, AND POSSESSION OF ANY OF THESE MATERIALS DOES NOT CONSTITUTE AUTHORITY FOR CONSTRUCTION. REPRODUCTION OR DUPLICATION OF ANY MATERIAL HEREIN IN ANY FORM IS A VIOLATION OF COPYRIGHT UNLESS AUTHORIZED VIA WRITTEN PERMISSION FROM SPECIALTY MARINE.